THIS DWG. IS SOLE PROPERTYOF **PASKALS FLUID SYSTEMS PVT. LTD.**
UNAUTHORISED USE OF THIS DWG. OR MAKING PRODUCT AS PER THIS DWG.
WITHOUT OUR PERMISSION OR ANY OTHER MISUSE IS NOT PERMITTED.

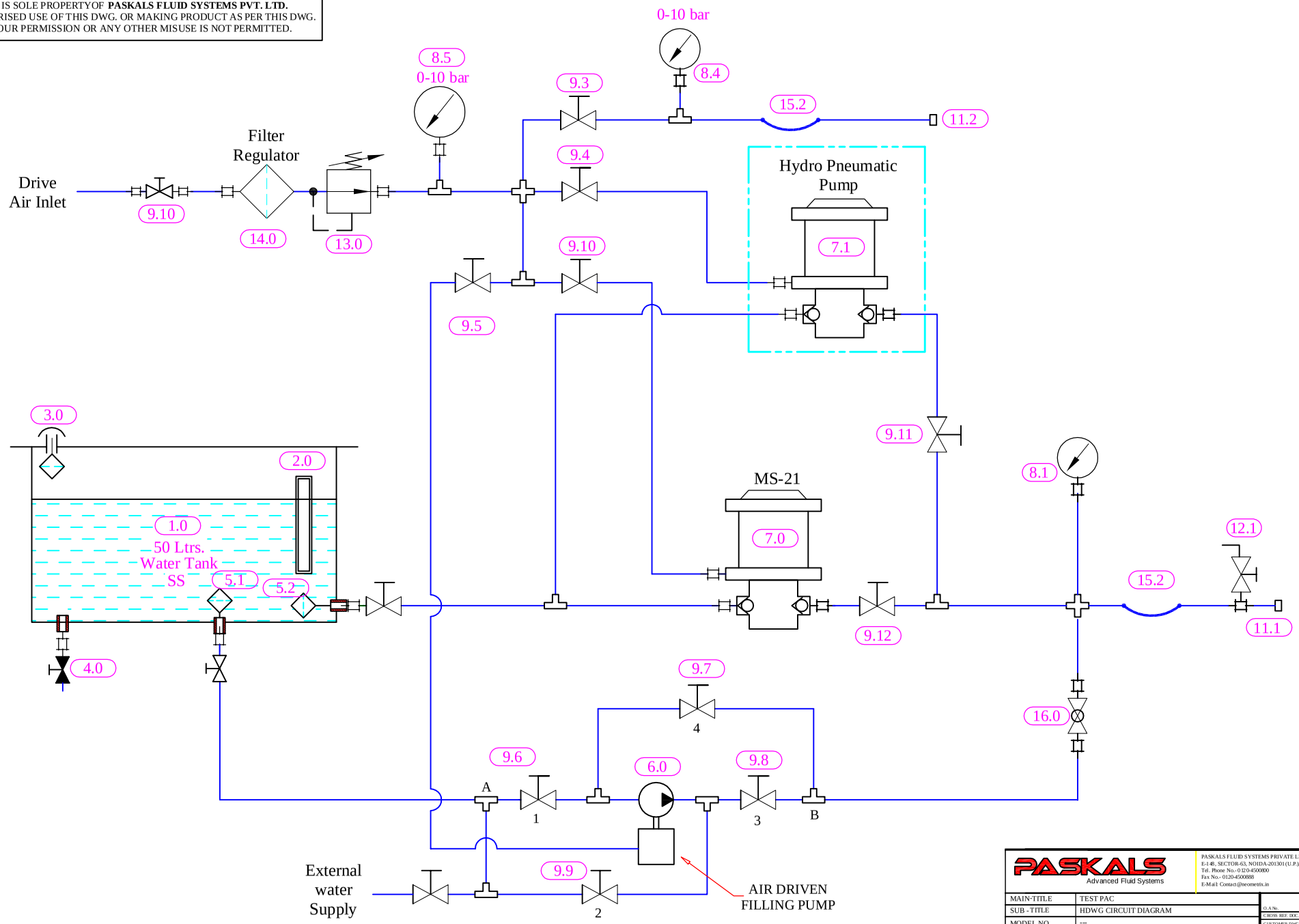

A → 1 → 3 → B (FILLING)

B → 4 → 2 → A (DESCENDING)

PASKALS
Advanced Fluid Systems

PASKALS FLUID SYSTEMS PRIVATE LIMITED
E-148, SECTOR-63, NOIDA-201301 (U.P.).
Tel. Phone No.- 0120-4500800
Fax No.- 0120-4500888
E-Mail Contact@tecometrix.in

MAIN-TITLE	TEST PAC								
SUB - TITLE	HDWG CIRCUIT DIAGRAM								
MODEL NO.	---								
CUSTOMER	ADVANCED VALVE								
END USER	ADVANCED VALVE								
APPLICATION	HYDRO TESTING								
PROJECTION	DRAWN BY & DATE	YC	26/1/214	SHEET	SCALE	SHEET No.	OF	PASKALS DWG. NO.	Rev.
	CHECKED BY & DATE	BKT	26/1/214	A4	NTS	01	01	T-PED-HDWG-CKT	04
	APPROVED BY & DATE	SPS	26/1/214						

Q.A No.
CROSS REF. DOC.
CUSTOMER DWG. / REF. No.
NOTES: